INSTRUCTION PAMPHLET U-5025

OCTOBER, 1928

INSTALLATION
AND
MAINTENANCE
OF
SEARCHLIGHT TYPE COLOR LIGHT SIGNALS

UNION SWITCH & SIGNAL CO.

SWISSVALE, PA.

INSTRUCTION PAMPHLET U-5028

OCTOBER, 1928

INSTALLATION
AND
MAINTENANCE
OF
SEARCHLIGHT TYPE COLOR LIGHT SIGNALS

UNION SWITCH & SIGNAL CO.

SWISSVALE, PA.

Printed in U. S. A.

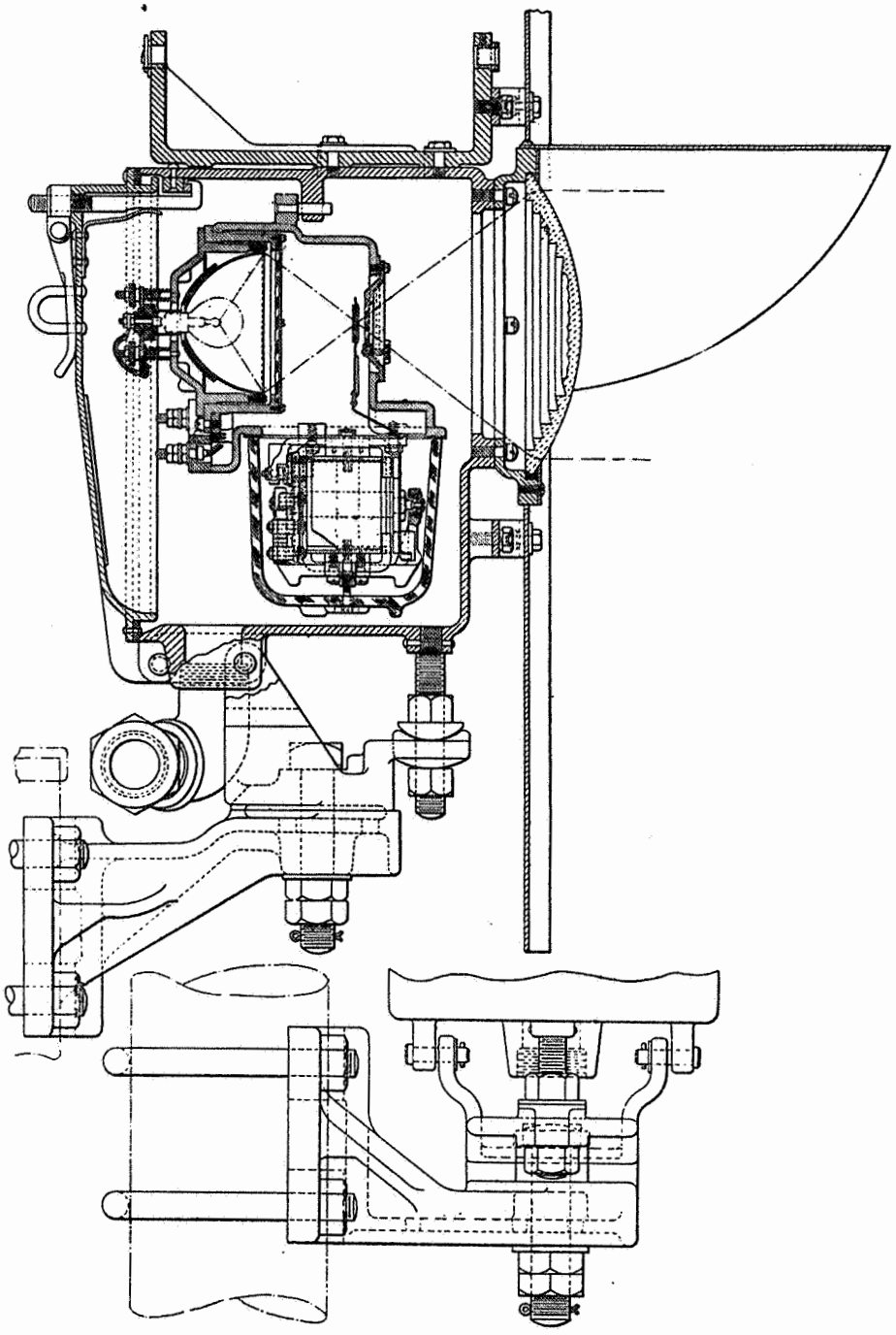

Fig. 1. Details of High Signal. Sectional View of Operating Unit and Case Illustrates Optical Principle and "Front of Mast" Mounting. Lower View Shows "Side of Mast" Mounting.

UNION SWITCH & SIGNAL CO.

SWISSVALE, PA.

INSTALLATION AND MAINTENANCE OF SEARCHLIGHT TYPE COLOR LIGHT SIGNALS

---

1. General

The searchlight type color light signal consists of an outer case which includes the lens, lens hood and signal support, and an operating relay. The outer case proper is the same for all signals. Two types of supporting arms are furnished for high signals. One type is designed for side of mast mounting, the center line of the signal being approximately nine (9) inches from the center line of the mast. Another type of supporting arm is furnished providing for front of mast mounting. In this case the signal is located close to the top of the mast, the case door in the open position being horizontal over the top of the mast. High signals are furnished with a background and "U" bolts for fastening the supporting arm to the mast and each signal is equipped with a sighting device for aligning the signal.

The signal operating relay is shipped in a separate container, being carefully packed to provide against damage to the mechanism in handling. The operating relay is accurately located and fastened in the case by means of a fixed stud and two body-bound bolts. The relays are interchangeable in the sense that it is not necessary that a relay be installed in a particular case.

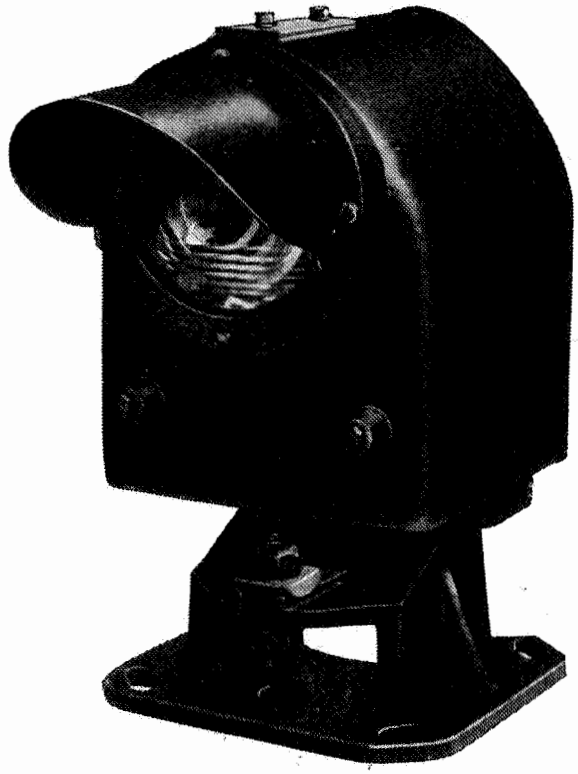

Fig. 2. View of Standard Dwarf Signal, showing the alignment adjustments.

The dwarf signal is the same as the high signal except as to the lens and deflecting prism cover glass; also it is not provided with a background and sighting device, and is fitted with a base suitable for mounting on a flat surface such as a concrete foundation, instead of a supporting arm.

2. D. C. Operating Relay

The operating mechanism is essentially a three position D. C. motor relay, having field or local coils and an operating or armature coil. The moving element is an iron armature which rotates approximately thirteen and one-half (13½) degrees each way from the center position, at which it stands, due to counterweighting, when deenergized. Directly connected to the armature shaft is a small spectacle in which are mounted three colored glass roundels, each of one inch diameter. These roundels are moved into the concen-

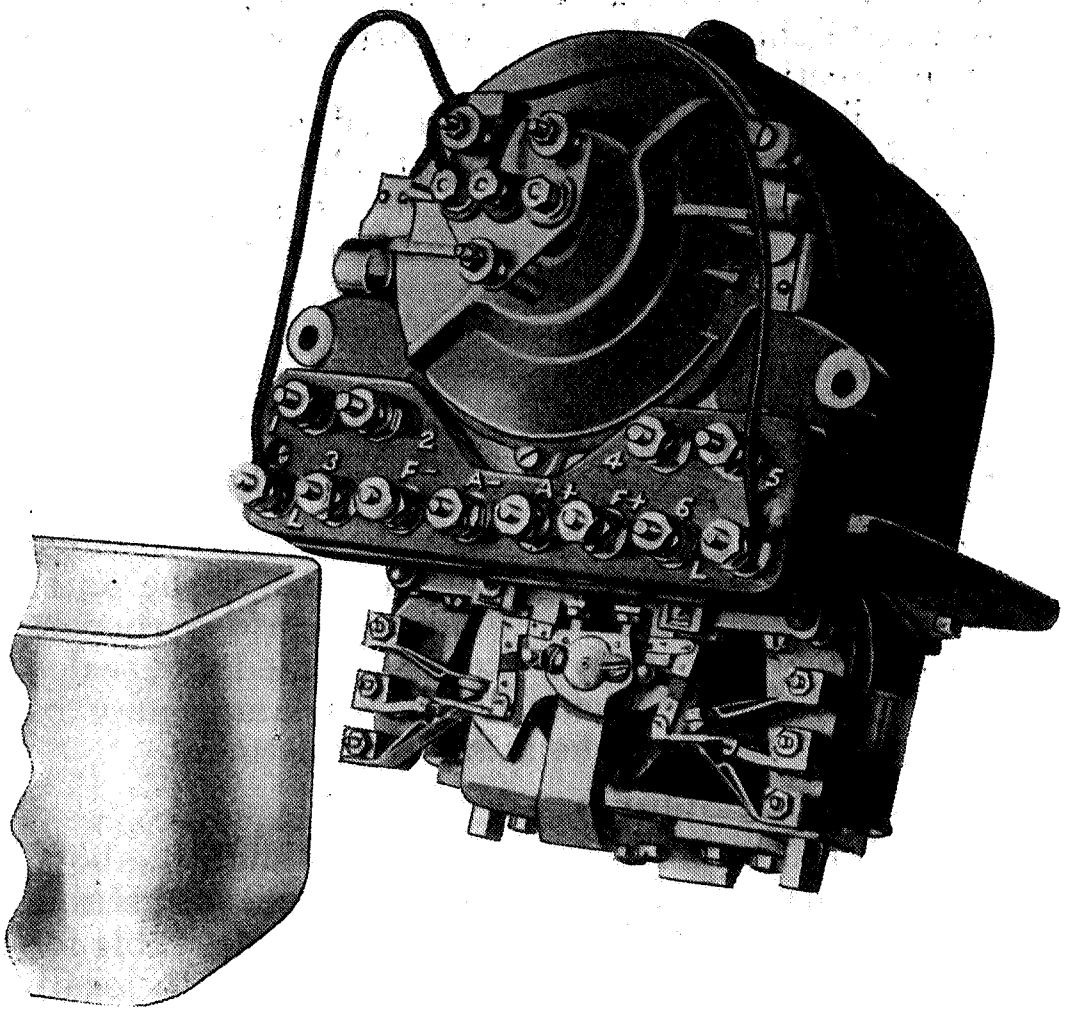

Fig. 3. Operating Relay.

trated light beam, as required, by the movement of the armature. In standard three color light signaling, the red roundel is located in the center and is in the light beam when the armature coil is deenergized. With a constant potential applied to the local or field coils, current passed through the armature coil in one direction rotates the armature against a stop to bring the yellow roundel into the light beam. Current passed through the armature coil in the other direction rotates the armature in the opposite direction against a stop to bring the green roundel into the light beam.

Thus the required change in colors is effected. For two color light signaling the armature is rotated only in one direction.

The light beam is concentrated at the colored roundel location by means of an elliptical glass reflector, which, with the lamp, lamp socket and reflector holder as a unit, is inserted and held in place with spring clips in the back of the relay top case. It is a characteristic of the elliptical reflector that, with the lamp filament located at the focal point of the reflector, the reflected light is concentrated at the other focal point of the complete ellipse, which in this signal relay is approximately the location of the colored roundel. After passing through the colored roundel, the beam spreads out to cover the lens in the outer case, which condenses the light rays into a concentrated beam. The lamp socket is adjusted and sealed at the factory and accurately based lamps may be placed in the socket without any readjustment.

3. Locating of Signals

The best location for high signals is slightly above the engineman's head and as near the rail on his side of the cab as practicable. It is therefore desirable for "side-of-mast" mounting on ground masts, to locate the signal on the track side of the mast. The supporting arm is fastened to the mast at approximately a right angle to the track, and for "front-of-mast" mounting approximately parallel to the track. If the signal is located too low the lens hood interferes with the "close-up" view of the indication. Where a signal is located on a signal bridge it should be mounted as low as practicable and, where convenient, approximately in line with the rail on the engineman's side. The location should be such that no part of the bridge structure interferes with the close-up view of the indication. Dwarf light signals should be located as high as is consistent with clearances and the standard practice of the railroad.

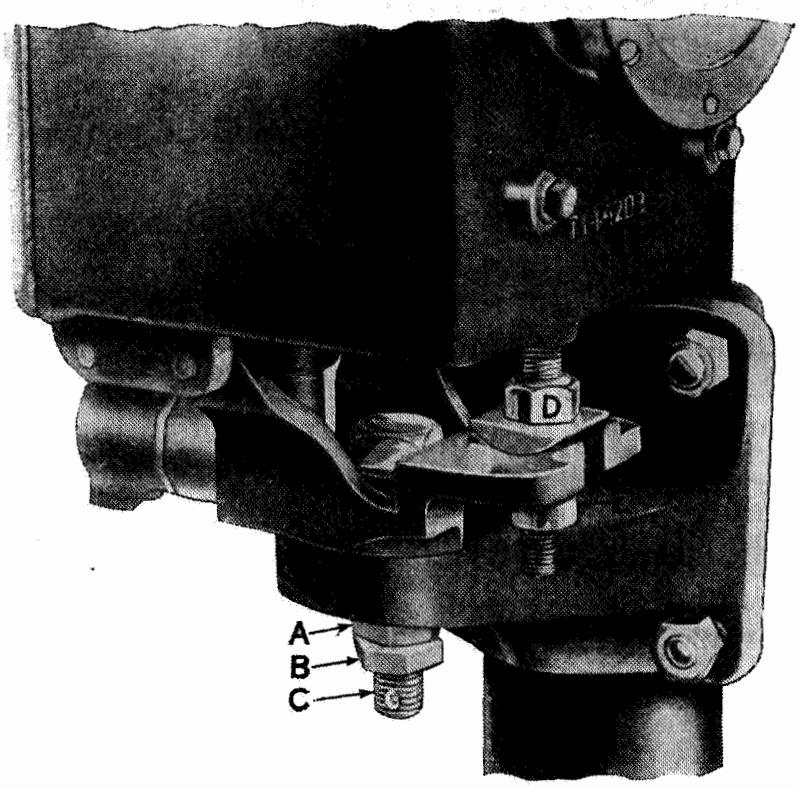

Fig. 4. Adjustable Bracket for "Side-of-Mast" Mounting.

4. Alignment

First align the signal horizontally; this is done on high signals by loosening jam nut B and nut A, Fig. 4 and turning the signal on stud bolt C as an axis until the vertical cross-hair in the sighting device located on the top of the signal case intersects the point on the track where the engineman should first see the indication. With the signal in this position, the nut A and then the jam nut B should be tightened and the adjustment should be checked by means of the sight to make sure that it has not been changed by the tightening of the nuts. The signal should then be aligned vertically. This is done by loosening nut E and adjusting nut D upward or downward until the horizontal cross-hair in the sight intersects the point on the track where the engineman should first see the indication. Nut E should then be tightened and the

adjustment should again be checked to insure that the proper alignment has been maintained. As the light beam is parallel to the sighting device on the signal case, the center line of the beam will be pointed to the selected location on the track.

As the required range of dwarf signals is comparatively short, accuracy of alignment is not so important and a sighting device is not considered necessary. Foundation bolts should be set to give the approximately correct horizontal alignment. The base casting has slotted holes to provide for some rotation of the signal in the horizontal plane for final horizontal alignment. The vertical adjustment is the same as for high signals. It is customary to point dwarf signals slightly above the horizontal to minimize the interference of the lens hood with the "close-up" view of the engineman.

Alignment on Curves

Standard searchlight signals are designed to produce a rather concentrated light beam for long range indication on tangent track or track of small curvature. Special "Deflecting Prisms" can be furnished when additional spread of light beam is required to properly signal track of greater curvature.

In the 10½″ diameter lens signal, a Spreadlite lens with 5°-45″ spread "from a point source," substituted for the standard lens, will give satisfactory results in the majority of cases. When extreme spread is required, a 30° flat spreader roundel giving 15° spread each side of center and a standard lens should be used. The Spreadlite lens may be substituted for the standard lens in the field by removing the lens ring, but the spreader roundel is located back of the standard lens and requires a spacer ring and longer cap screws to hold the lens ring and spacer ring in place. Both the standard lens and the Spreadlite lens have a half toric formation which projects a portion of the light

beam downward at an angle of approximately 25° from the center line of the main light beam, for a "close-up" view of the indication when the signal is located above the engineman's line of sight.

In the 8⅜″ diameter lens signal, the standard lens has a deflecting prism formation moulded in the center of the lens on the inside; this deflects a portion of the light beam downward at an angle of approximately 40° from the center line of the main light beam, for "close-up" view of the indication, when the signal is located above the engineman's line of sight. For the 8⅜″ diameter lens signal, two deflecting prism cover glasses are available for use on curved track, one 10° in one direction only from the center line for moderately curved track, and one 20° in one direction only from the center line for use where extreme spread is required. The deflecting prism cover glass with its supporting ring is mounted in front of the standard lens by means of two screws threaded into the standard lens ring in place of the dummy screws used to protect the tapped holes.

The standard dwarf signal is equipped with a 6⅜″ diameter lens and a 20° deflecting prism cover glass which deflects a portion of the light beam in one direction from the center line of the main beam. Dwarf signals, however, are sometimes furnished with an 8⅜″ diameter lens and a 20° deflecting prism cover glass, for uniformity in size of lens as between high and dwarf signals. The cover glass is applied to dwarf signals to deflect a portion of the beam upward to improve the engineman's "close-up" view when the signal is located below his line of sight.

The half toric section of the standard 10½″ diameter lens, and any of the deflecting prism formations, may be turned in the signal to deflect the light toward the track governed. Application of the deflecting prism, cover glasses, spreader glasses etc. or turning

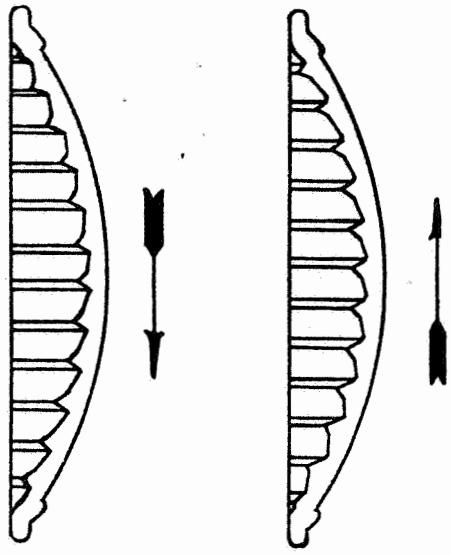

Fig. 5. Sectional Views of Deflecting Prism Cover Glasses.

them around their horizontal axis, as required in the field, does not disturb the adjustments of the signal.

Fig. 5 shows sectional views of a deflecting prism cover glass, the arrows indicating the direction a portion of the light beam is deflected in relation to the prismatic formation on the inside of the cover glass. It is obvious that the same cover glass can be used to deflect light in either direction by revolving it 180°.

To align a signal on curved track, focus the sight on the farthest point of the curve, or on any other point where the indication should be first seen by the engineman. Fig. 6 illustrates how the signal is aligned and the deflecting prism cover glass applied. The signal is focused on point "X"; the main beam is indicated

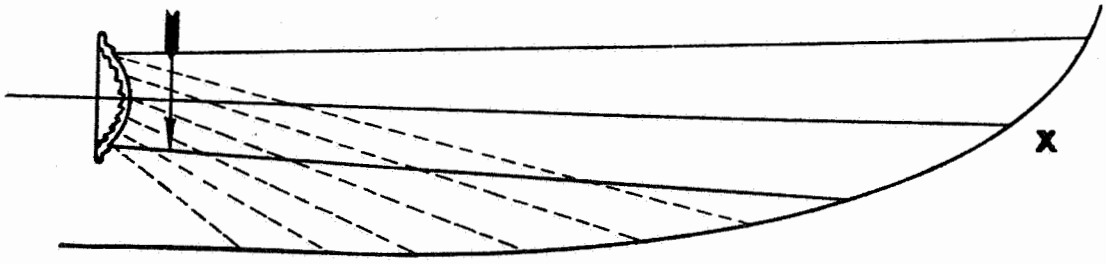

Fig 6. Diagram showing alignment of Light Signal on Curved Track.

by the full lines. The cover glass is applied to deflect a portion of the beam in the direction of the arrow. The deflected light is indicated by the broken lines. After the signal has been aligned, the indication should be observed from the track to determine whether the point of maximum range has been properly selected so as to utilize the full spread of the signal to best advantage around the curve.

The operating relay should not be installed permanently in the signal until the wiring is in place and ready to be connected. One operating relay or preferably a relay top case with reflector and lamp unit, which has been properly focused, may be used to check the alignment of signals by observation from the track, where it is considered advisable.

5. Other Installation Details

The high signals are furnished with or without flexible conduit in accord with the requirements of the railroad. The present tendency with the railroads is toward the elimination of the flexible conduit as the heavy rubber covered wire with braid covering can be brought directly to the operating relay terminals. When conduit is not used, the wires to the signal are laced or taped together and trained as desired. It is desirable that the wire entrance to the signal be sealed up after the wires are in place to keep moisture and dust out of the signal. A good way to accomplish this is to fill the space around the wires from the inside of the signal case, with oakum.

When the wires are in place, the inside of the signal case and the lens should be carefully cleaned. The operating relay should be inspected, tested and then thoroughly cleaned, particularly all exposed glass through which the light beam passes as well as the glass reflector, if found necessary. A clean cloth which does not deposit lint, dampened with alcohol, should be used to remove any grease or oily substance that may get on the lens, the glass reflector or other glass.

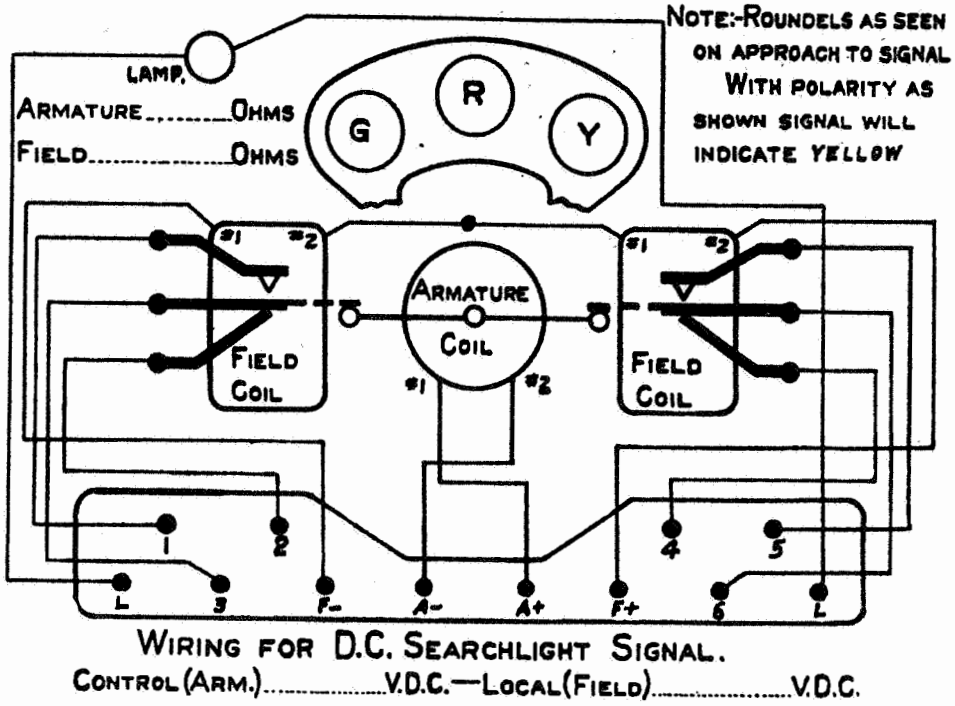

Fig. 7. Diagram of Internal Wiring of Signal.

The relay may then be fastened on the signal and wires connected. The operating relay should always be handled with care and not subjected to shock, and under normal conditions should not be opened. Where a signal is not to be immediately placed in service, it is advisable that a piece of paper be placed in front of the reflector to prevent reflected light from giving an indication.

Operating relays are usually equipped with two dependent front and back contacts, and with an arrangement of binding posts, binding post designation figures, and wiring in accord with diagram shown in Figure 7. Both back contacts are closed when the relay armature is deenergized. The other contacts are closed only at the "yellow" and "green" positions of the relay respectively. This relay is also furnished, when so specified, with the binding posts designated

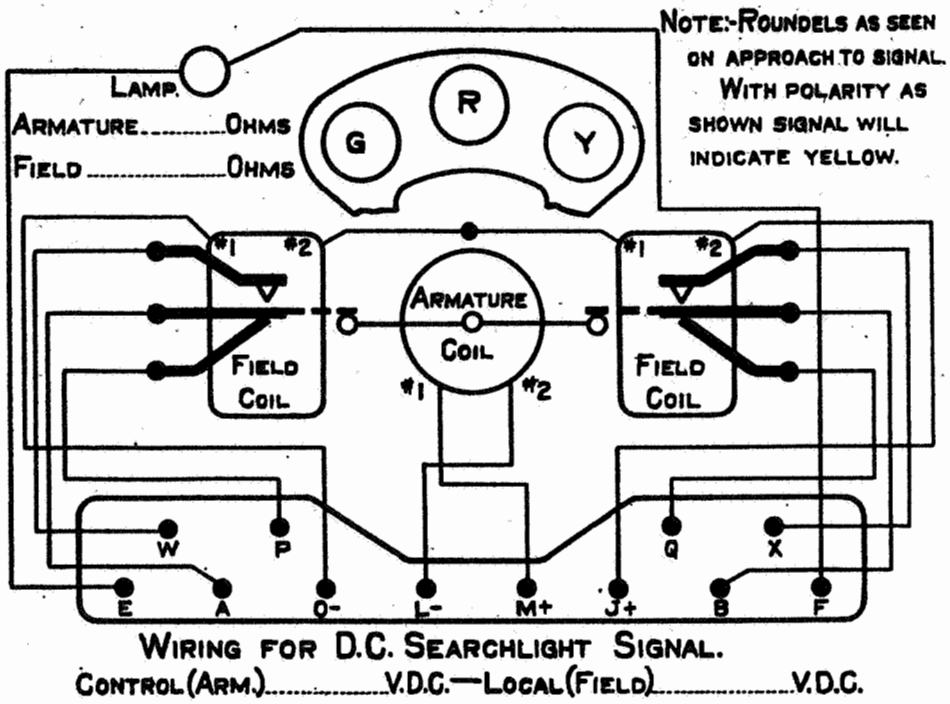

Fig. 8. Diagram of Internal Wiring of Signal (same as Fig. 7 except terminal designation.)

with letters as shown in Fig. 8. The operating relay is also furnished without contacts. The wiring diagram furnished with this relay is the same as Figs. 7 or 8, but the wires from the contacts to the terminal board are omitted, and the binding post holes in the terminal board for the contact wires are closed up with dummy screws. A wiring diagram in accord with the particular relay to be used is placed on the inside of the door of each signal case. With voltage polarity applied as shown on the wiring diagram, the armature should operate in the direction indicated.

It is important to check the voltage applied to the signal and the signal lamp when connected. The potential applied to the local or field coils should not be less than six (6) or greater than eight (8) volts, and, to the operating or armature coil, not less than six and one-half (6½) or greater than eight (8) volts,

measured at the signal binding posts. The voltage applied to the lamp, measured at the lamp terminals, should be very close to the rated voltage of the lamp. Even a slightly higher voltage than the rated, materially reduces the lamp life, and a materially lower voltage reduces the candle power of the lamp appreciably.

6. Inspection and Test of Operating Relay

The operating relay should be given a visual inspection to see that it has not been physically damaged in shipment. Check to see that the glass cover is not cracked or disturbed or that the glass reflector or any of the glass parts are not cracked or broken. Exert outward pressure on the reflector holder, and check to see that the holding springs have sufficient tension to properly seat the reflector holder. By visual observation through the glass cover, see that the counterweight arms and connections to the contacts are properly in place, and that clear armature air gaps of approximately 0.050″ exists. Rock the relay gently sideways and see that the armature rotates freely.

The pick-up and release of the relay should then be taken to see that these operating values are in practical accord with the limits given in the table following, for the particular type of relay. The figures given in the table are the values specified for our shop test.

Apply a constant potential of exactly six (6) volts to the local or field coil terminals while making the pick-up and release tests.

Release

Apply voltage to the armature coil terminals equal to twice the maximum pick-up value shown in the table and then gradually reduce this voltage until the armature returns to the central position. The value

of the voltage at which the counterweight just touches the bottom stop is the release, and should not be less than the value given in the table.

Pick-up

Immediately after measuring release, the circuit should be opened for one second and then voltage applied in the same direction and gradually increased until the relay picks up, and the counterweight arm just touches the top stop. This value of the voltage is the pick-up, and should not exceed the value given in the table.

The polarity of the voltage on the armature should then be reversed and the release and pick-up taken in the same way in the reverse direction.

It is desirable in taking the pick-up and release that the voltage applied to the armature terminals be varied very gradually to aid in detecting any friction or mechanical resistance to the movement of the armature. The best method of varying the voltage is by means of an adjustable resistance connected in accord with the potentiometer method.

TABLE OF OPERATING VALUES

TYPE OF RELAY	Resistance Ohms		FIELD VOLTS	ARMATURE VOLTS	
	Field	Armature		Minimum Release	Max. Pick-up
With Contacts	500	250	6	2.5	6
Less Contacts	500	250	6	3.0	6

7. Maintenance

The first essential of maintenance of the signal is cleanliness. The case door should be kept tightly closed, except when necessary to open it, to keep all dust, rain, snow, etc. out of the signal. It will therefore usually be only necessary to clean the outside surface of the lens occasionally as the conditions of the atmosphere, etc. require. If dust or foreign material collects on the reflector or glass through which the light beam passes or on the inside of the lens for any reason, it should, of course, be cleaned off. Cleaning of glass should be done as outlined under Installation Details (Section 5). To clean the inside of the lens or the glass on the lens side of the relay, it is necessary to remove the relay from its mounting and tip it forward.

Except in cases of emergency, we recommend that the operating relay not be opened in the field. If, for any reason, the relay is thought not to be in proper operating condition, we recommend that it be replaced by a spare operating relay and sent to the railroad repair shop or to our factory for investigation and repair.

Periodical inspection should be made of the colored glass roundels to see if they are properly in place or broken. Inspection of the colored roundels may be made by removing the reflector holder and observing the roundels through the glass at this location. Occasionally a roundel will crack due to a strain set up in the glass on account of the intense heat of the concentrated light beam. The roundels, however, are made from special heat resisting glass to withstand this heat. A simple crack through the glass is not considered objectionable as the small retaining ring around the edge of the glass will hold the parts in place. If, however, a double crack should occur or a small piece break out, allowing white light to pass through, the roundel should be replaced. If in emer-

gency, it is found necessary to change a roundel in the field, this may be done without disturbing the working parts of the relay, by removing the ring in which the reflector holder is seated. This ring is held in place by three screws entering the relay top case, one of which is sealed with a lead seal. The joint between this ring and the relay top case is sealed with a thin coating of white lead and should be resealed when the ring is replaced, care being exercised in handling so that no particles of the white lead or other foreign matter gets into the relay. Care should also be taken, in replacing roundels, not to bend or distort the small spectacle which supports the roundels, as clearance between this movable element and other parts is important.

The relay armature revolves on specially constructed ball bearings. The shaft and ball race are made of special non-corroding material and the bearings are not oiled. As no oil should ever be used on these bearings or other pivots of the relay, there is normally no occasion to open the relay.

We recommend that the pick-up and release of the operating relay be taken and recorded periodically, approximately every six months. This should be done as outlined herein under "Inspection and Tests." (Section 6). As the iron structure of this relay is made of a special non-aging iron, very little variation may be expected from the operating values given in the table, on account of residual magnetism. The principal purpose of the electrical test, therefore, is to determine whether any friction is developing in the armature bearing or other moving parts. A "jerky" movement of the armature when the armature current is varied gradually, is an indication of friction, roughness or foreign particles in the ball bearings of the armature. When this test is made, the operation of the contacts, when used, should be observed to see that they are closing properly with a slide of approximately

$\frac{1}{32}''$ on the front contact and $\frac{1}{64}''$ on the back contact. An increase in pick-up value or a decrease in release of over 20%, in our opinion, would indicate undue friction and would justify sending an operating relay to the shop for investigation and repair. Overhauling and repair of the operating relay is covered by our service specification No. 1973, copies of which should be made available for the information and guidance of the shop men assigned to this work. Copies of this specification will be furnished by us on request.

Lamps furnished by the Union Switch & Signal Co. for the searchlight type signal are based with the filaments accurately located with respect to the pins in the base. It is obvious that when such a lamp is installed for replacement, the signal indication will remain the same as before. If non-precision lamps, having filaments appreciably off the true location, are used, not only will the signal indication be impaired, but the alignment of the light beam may not be parallel to the sighting device on the signal and therefore not pointed in the direction indicated. For best results, therefore, it is desirable that accurately based lamps be used.

The time that lamps may be used consistent with minimum lamp failures varies with several other factors. Some railroads continue the use of signal lamps until the lamp fails. Most of the railroads, however, replace the lamp at regular intervals with a view of anticipating the larger percentage of lamp failures. The logical solution seemingly, would be to keep the lamp in service for continuous lighting approximately 90% of its rated life, and on approach lighting an equivalent length of time, based on the average time per day it is lighted.